REV.	ECN NO./DESCRIPTION	DATE
1	N160534	11/03'16
1A	NDR210025	08/26'21

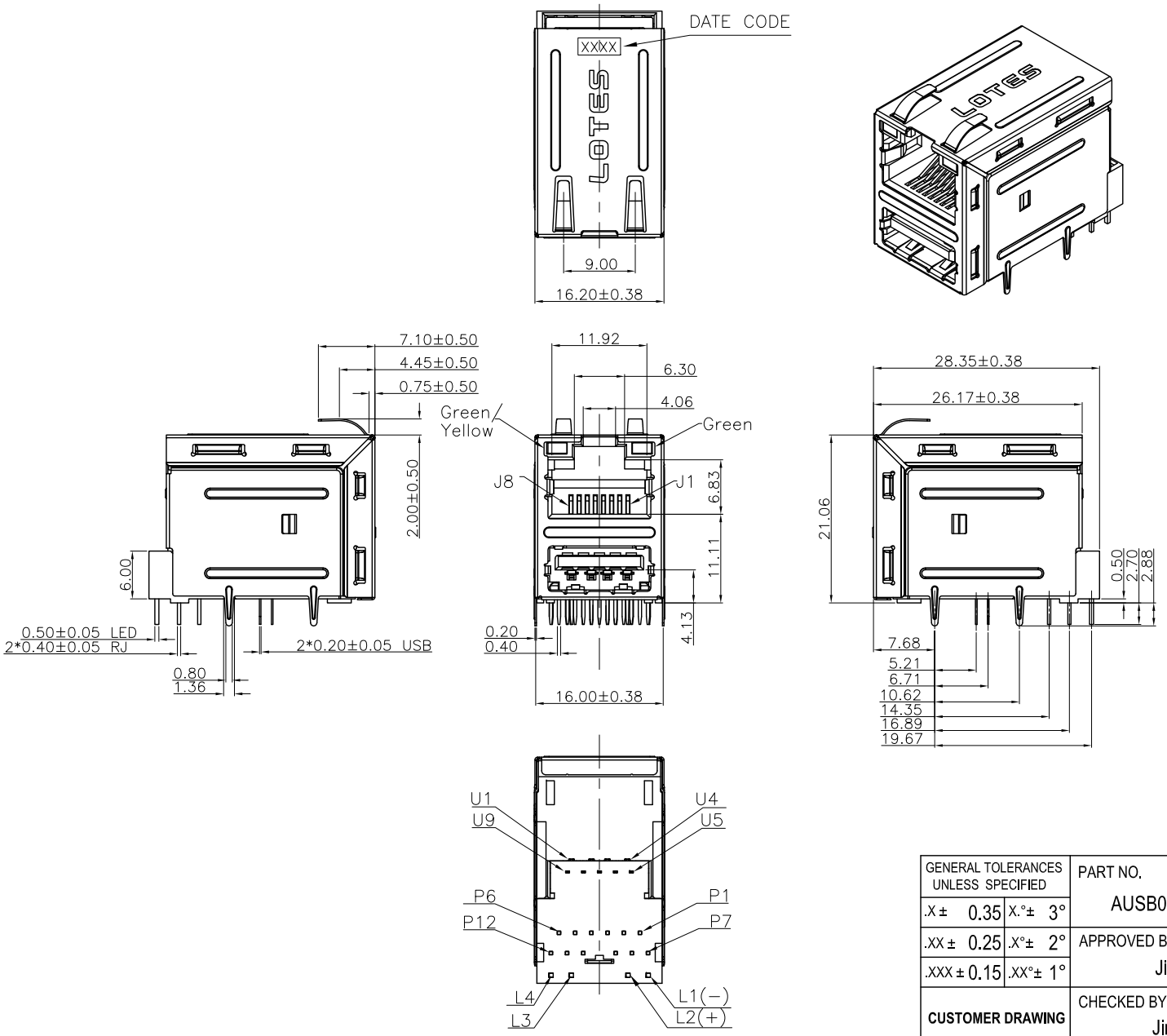

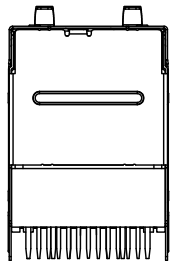

BACK VIEW

GENERAL TOLERANCES UNLESS SPECIFIED		PART NO.	LOTES
.X ± 0.35	X.° ± 3°	AUSB0125-K007C21	
.XX ± 0.25	.X° ± 2°	APPROVED BY Jianbin Ai	TITLE RJ45+1USB3.0 Conn. WITH LED
.XXX ± 0.15	.XX° ± 1°		
CUSTOMER DRAWING		CHECKED BY Jintao Zhu	DWG NO. GAP-AUSB0125-K007C21
SIZE A4	UNITS mm[INCH]	DRAWN BY Jiefeng Huang	SHEET 1/ 5 · SCALE 1:1 · REV 1A

REV.	ECN NO./DESCRIPTION	DATE
1	N160534	11/03'16
1A	NDR210025	08/26'21

TRANSFORMER ELECTRICAL SPECIFICATIONS AT 25°

Turns Ratio	Data Rate (MHz)	Insertion Loss (dB min.)	Return Loss 100Ω (dB max.)				Cross talk (dB max.)			DM-CM (dB max.)	CM-CM (dB max.)	Hi - pot
TD1/2/3/4		1-100 MHz	1 -30 MHz	30-60 MHz	60-80 MHz	80-100 MHz	1-30 MHz	30-60 MHz	60-100 MHz	1 -100 MHz	1 -100 MHz	0.5mA Max.
1CT:1CT	10/100/1000	-1.2	-18	-16	-12	-10	-40	-35	-30	-30	-30	2250VDC

SCHEMATIC :

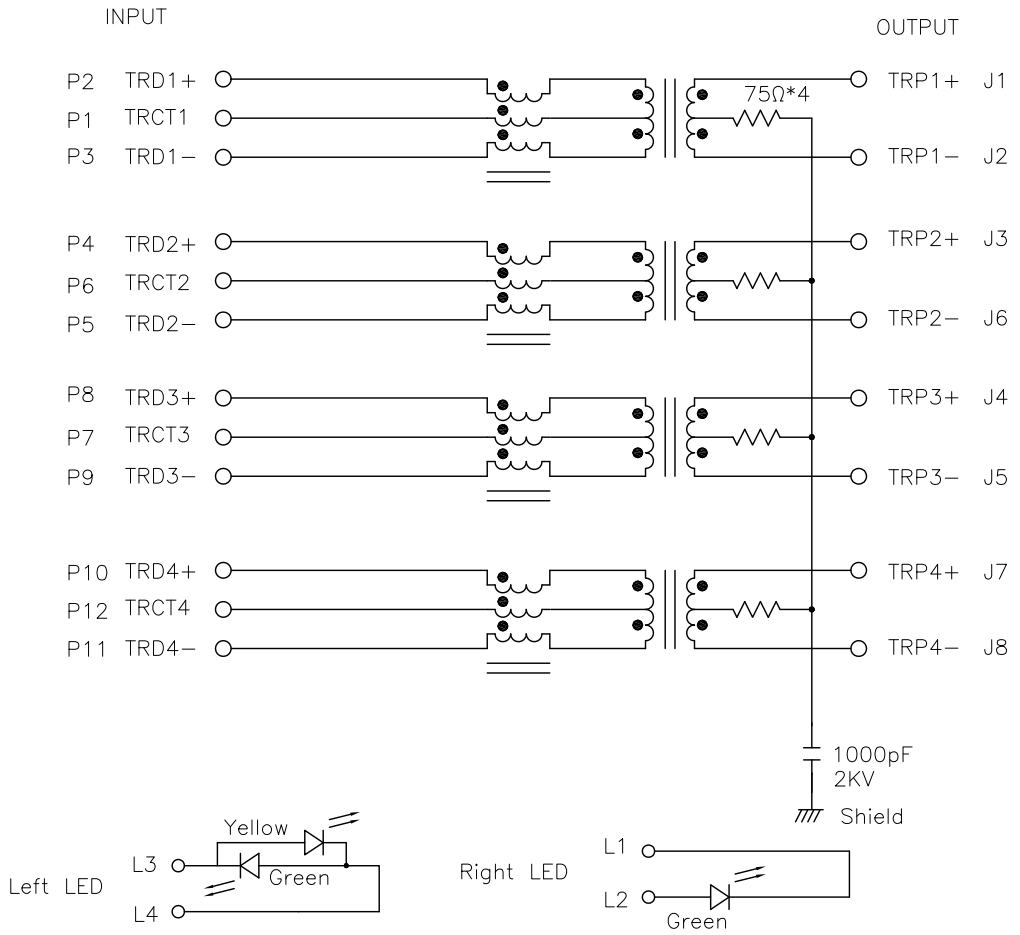

USB3.0 Pin Assignments

Pin Number	Signal Name	Pin Number	Signal Name
U1	VBUS	U5	SSRX-
U2	D-	U6	SSRX+
U3	D+	U7	GND
U4	GND	U8	SSTX-
Shell	Shield	U9	SSTX+

NOTE:

1.INDUCTANCE 350uH MIN 100KHz 100mV 8mA DC

2.LED CONFIGURATION

Standard LED	Wavelength(λ)	V / IF=20mA
Green	565-575nm	1.7-2.6 V
Yellow	585-595nm	1.7-2.6 V

GENERAL TOLERANCES UNLESS SPECIFIED .X ± 0.35 X.° ± 3° .XX ± 0.25 .X° ± 2° .XXX ± 0.15 .XX° ± 1°	PART NO. AUSB0125-K007C21	LOTES	
	APPROVED BY Jianbin Ai	TITLE RJ45+1USB3.0 Conn. WITH LED	
CUSTOMER DRAWING	CHECKED BY Jintao Zhu	DWG NO. GAP-AUSB0125-K007C21	
SIZE A4 / UNITS mm[INCH]	DRAWN BY Jiefeng Huang	SHEET 2/ 5	SCALE 1:1 / REV 1A

REV.	ECN NO./DESCRIPTION	DATE
1	N160534	11/03'16
1A	NDR210025	08/26'21

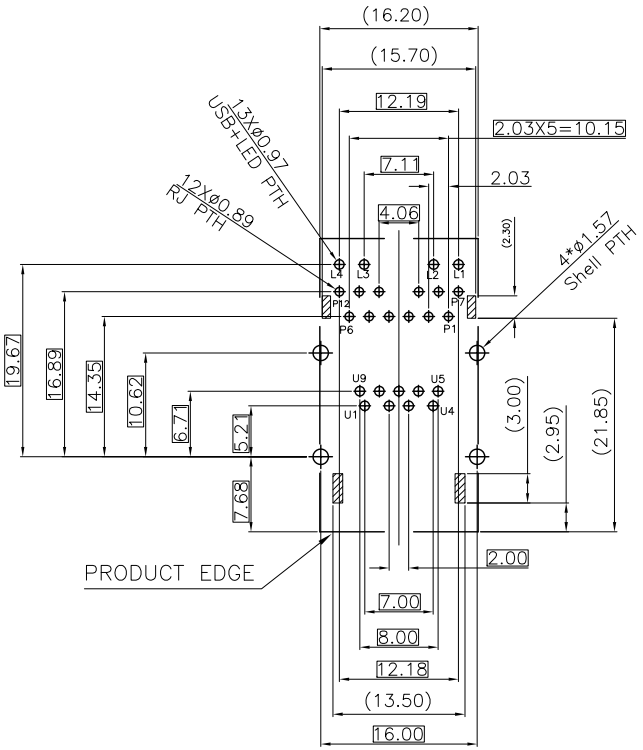

RECONNENDED PCB LAYOUT TOL.:±0.05
STAND OFF AREA
(TOP VIEW)

ITEM	Desc.	Q'TY	Remark
10	LIGHTER	2	LED
09	TRANSFORMER	1	
08	RJ45 Ter.	8	PHOSPHOR BRONZE C5210 FINISH:GOLD/NICKEL/MATTE TIN
07	P-CONTACT	12	PHOSPHOR BRONZE C5191 FINISH:NICKEL/MATTE TIN
06	USB3.0 Ter.	9	BRASS C2680 FINISH:GOLD/NICKEL/MATTE TIN
05	BACK SHELL	1	SUS301 FINISH:NICKEL/MATTE TIN
04	FRONT SHELL	1	SUS301
03	SPACER	2	PA66+30%GF UL94V-0,BLACK.
02	USB3.0 HSG	1	PA9T+45%GF UL94V-0,BLUE 300C.
01	RJ45 HSG	1	PA66+30%GF UL94V-0,BLACK.

GENERAL TOLERANCES UNLESS SPECIFIED		PART NO. AUSB0125-K007C21	LOTES
.X ± 0.35	X.° ± 3°		
.XX ± 0.25	.X° ± 2°	APPROVED BY Jianbin Ai	TITLE RJ45+1USB3.0 Conn. WITH LED
.XXX ± 0.15	.XX° ± 1°		
CUSTOMER DRAWING		CHECKED BY Jintao Zhu	DWG NO. GAP-AUSB0125-K007C21
SIZE A4	UNITS mm[INCH]	DRAWN BY Jiefeng Huang	SHEET 3/ 5 · SCALE 1:1 · REV 1A

REV.	ECN NO./DESCRIPTION	DATE
1	N160534	11/03'16
1A	NDR210025	08/26'21

NOTES:

1.MATERIAL:
- 1-1.RJ45 HOUSING: PA66+30%GF UL94V-0,BLACK.
- 1-2.SPACER: PA66+30%GF UL94V-0,BLACK.
- 1-3.USB3.0 HOUSING: PA9T+45%GF UL94V-0,BLUE 300C.
- 1-4.RJ45 CONTACT: PHOSPHOR BRONZE C5210.
- 1-5.USB3.0 CONTACT: BRASS C2680.
- 1-6.P-CONTACT: PHOSPHOR BRONZE C5191.
- 1-7.FRONT SHELL: STAINLESS STEEL SUS301.
- 1-8.BACK SHELL: STAINLESS STEEL SUS301.

2.FINISH:
- 2-1.RJ45 CONTACT:Au1u"Min PLATING ON FUNCTIONAL AREA OF CONTACT. MATTE TIN 100u"MIN.PLATING ON SOLDER AREA. NI 50u" MIN.UNDER PLATING OVER ALL.
- 2-2.USB3.0 CONTACT:Au1u"Min PLATING ON FUNCTIONAL AREA OF CONTACT. MATTE TIN 100u"MIN.PLATING ON SOLDER AREA. NI 50u" MIN.UNDER PLATING OVER ALL.
- 2-3.P-CONTACT:NI 100u" MIN. UNDER PLATING. 100u" MIN. MATTE TIN PLATED ON SOLDER AREA.
- 2-4.BACK SHELL:NI 30u" MIN.UNDER PLATING. MATTE TIN 80u"MIN.PLATING ON SOLDER AREA.

3.MECHANICAL PERFORMANCE:
- 3-1.RJ45:
  - INSERTION FORCE:2.2kgf MAX.WITH LATCH DEPRESSED.
  - REMOVAL FORCE:4.4kgf MAX.WITH LATCH DEPRESSED.
  - LOCKING FORCE OF PLUG LATCH:5Kgf MIN.60±5 Sec.
  - DURABILITY:750 CYCLES.
- 3-2.USB3.0:
  - INSERTION FORCE: 3.0kgf MAX.
  - REMOVAL FORCE: 0.7kgf MIN.
  - DURABILITY: 1500 CYCLES.

4.ELECTRICAL PERFORMANCE:
- 4-1.USB3.0:
  - LLCR:
    - VBUS &GND PINS: 30mΩ MAX..
    - OTHER PINS: 50mΩ MAX..
  - INSULATION RESISTANCE: 100MΩ MIN..
  - DIELECRIC WITHSTAND VOLTAGE:
    - AC 100V FOR 1 MINUTE.

5.RoHS COMPLIANT.

6.WAVE SOLDER:
THE CONNECTOR SHALL BE MOUNTED ON THE PCB, THE TEMPERATURE OF THE SOLDER SHALL BE 260±5°C AND IMMERSION DURATION:3~5 SECONDS. LOTES ASSURES 1000PPM FOR LED DEFECT AFTER WAVE SOLDER.

7.RJ45 CAVITY CONFORMS TO FCC RULES AND REGULATION PART 68 SUBPART F

8.D/C: XXXX
- WEEK
- YEAR

9.PRODUCT NUMBER NOTE:
A USB 0125-K 007 C 21
- COSTOMER CODE
- TRAY PACKING
- PRODUCT SERIAL NUMBER
- RoHS COMPLIANT
- TYPE SERIAL NUMBER
- USB TYPE
- FINISHED PRODUCT

GENERAL TOLERANCES UNLESS SPECIFIED .X ± 0.35 .X.° ± 3° .XX ± 0.25 .X° ± 2° .XXX ± 0.15 .XX° ± 1°	PART NO. AUSB0125-K007C21	LOTES	
	APPROVED BY Jianbin Ai	TITLE RJ45+1USB3.0 Conn. WITH LED	
CUSTOMER DRAWING	CHECKED BY Jintao Zhu	DWG NO. GAP-AUSB0125-K007C21	
SIZE: A4 / UNITS: mm[INCH]	DRAWN BY Jiefeng Huang	SHEET 4/ 5	SCALE 1:1 / REV 1A

REV.	ECN NO./DESCRIPTION	DATE
1	N160534	11/03'16
1A	NDR210025	08/26'21

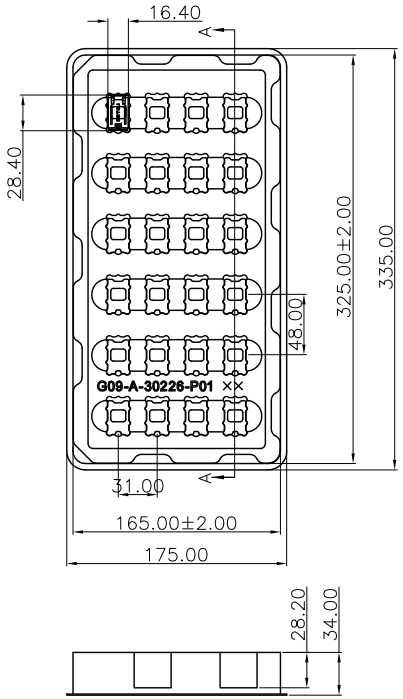

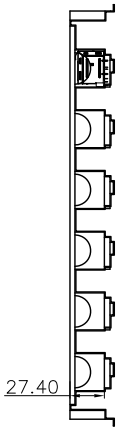

SECTION A–A

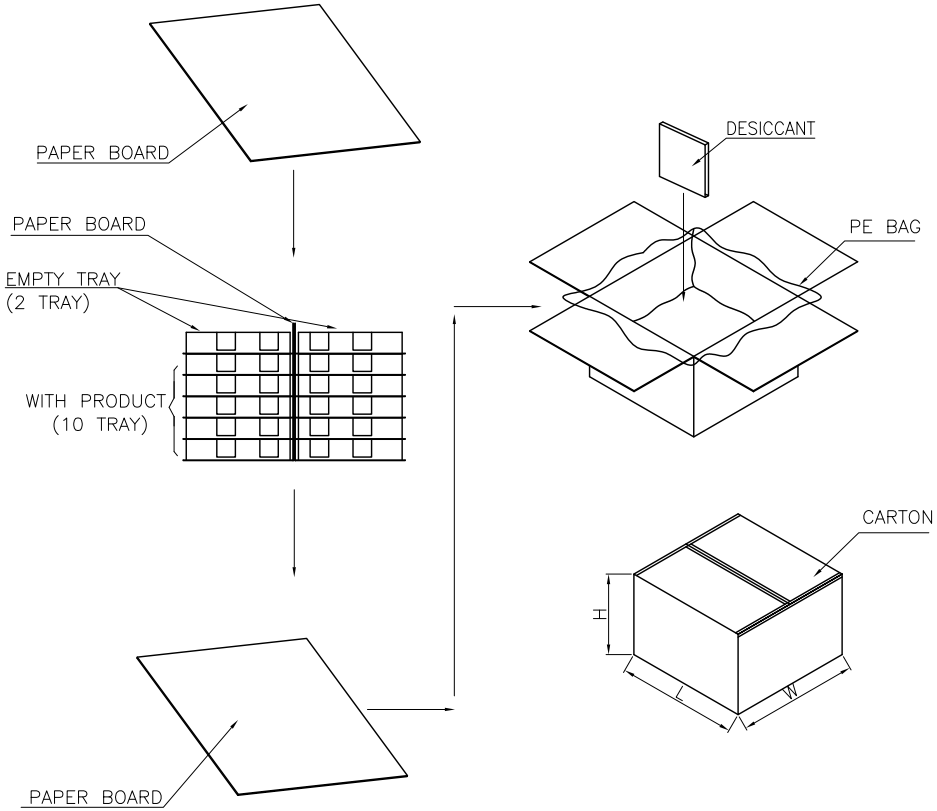

DESCRIPTION	P/N	SPECIFICATION	QT'Y
RJ45+2USB2.0 Conn.	AUSB0125–K007C21	10*TRAY/BOX	240PCS
1*TRAY	AUSB0125–K007C21	TAPE&TRAY PACKING	24PCS
TRAY	G09–A–30226–P01	PET,T=0.80mm	12PCS
PE BAG	G09–6–50002–P03	520*320*460mm;T=0.05	1PCS
CARTON	G09–1–35073–P01	360*345*180;K=A	1PCS
PAPER BOARD(TOP&BOTTOM)	G09–3–30002–K01	320*320*4mm;C33;	2PCS
PAPER BOARD(MIDDLE)	G09–3–30024–P01	320*150*3;K=B	1PCS
DESICCANT	G09–7–00002–K01	30g/BAG	1BAG

GENERAL TOLERANCES UNLESS SPECIFIED		PART NO.	LOTES
.X ± 0.35	X.° ± 3°	AUSB0125-K007C21	
.XX ± 0.25	.X° ± 2°	APPROVED BY: Jianbin Ai	TITLE: RJ45+1USB3.0 Conn. WITH LED
.XXX ± 0.15	.XX° ± 1°		
CUSTOMER DRAWING		CHECKED BY: Jintao Zhu	DWG NO. GAP-AUSB0125-K007C21
SIZE: A4	UNITS: mm[INCH]	DRAWN BY: Jiefeng Huang	SHEET 5 / 5 · SCALE 1:1 · REV 1A