BON REX INDUSTRIAL LIMITED

Tel: (86)755-61282546 Fax: (86)755-29029085
Add: Room 625, Jing Xin Buiding, Guan Lan, Long Hua District,
ShenZhen City 518110 Guang Dong Province, China

POLYMER LI-ION BATTERY PRODUCT SPECIFICATIONS

Model: BR383454D-PCM-NTC-LD
Capacity: ≥720mAh
Date: 2019-4-4

Customer Approval

Comment: (Please return one copy with your approval signature)

Customer's Signature:

Approved	Checked	Draft

Datasheet: BR383454D-PCM-NTC-LD

1.Scope: This document describes the product specifications of rechargeable lithium ion polymer battery produced by BONREX.

2. P/N: BR383454D-PCM-NTC-LD

3. Parameters Index:

3.1 Parameters:

No.	Item	Spec	Remark
1	Charge Voltage Max.	4.2V	
2	Nominal Voltage	3.7V	Cell voltage between3.85V ~3.95 before shipping
3	Nominal Capacity	≥720mAh@.0.2C Discharge	Nominal capacity refers to the capacity of 0.2C discharge with 2.75 V cut-off voltage, after charging with standard method.
4	Cycle Life	≥300 Times	One cycle refer to one charge period and then one discharge period. Test condition: Charge: 0.5C to 4.2V Discharge: 1.5C to 2.75V The cycle life is the cycle times when the discharge capacity is about 80% of the rated capacity.
5	Self-discharge	Residual Capacity>90%	After standard charging, storied at 25°C±0.5°C for 30 days, then measure the capacity as item 4.
6	Impedance	Max: 100mΩ	After standard charging, measure the internal resistance with AC1KHz
7	Charge Current(Max)	1.0C	
8	Discharge Current Max.	3.0C	Max discharge continuous current 2.16A
9	Discharge Cut-off Voltage	2.75V	
10	Operating Temperature	Charge: -20 ℃~ +45℃ Discharge: -40℃~ +60℃	Cells must be storied at 3.6V-3.9V. During long period storage, cells should be maintained every 90 days. The method is to do a charge-discharge cycle with standard method, then charge to 3.7—3.9V.
11	Storage Temperature	-20℃~ +25℃	<12month
		-20℃~ +45℃	<3month
		-20℃~ +60℃	<1month
12	Weight	Appr.14g	
13	Pack Dimension	T:4.1mm Max W:34.5mm Max L: 53.5~55mm	Measured with weighting 300gf at 25℃± 0.5℃ Not including Tabs
14	PCM	BR22	

Note: if the battery is in series, the internal resistance of PTC will change according to the temperature.

4. Performance Testing and Inspection

• 4.1 Standard Testing Environment

Unless otherwise noticed, the testing should be done within month time from delivery, and the charging-recharging time should be less than 5 times. The testing conditions are as follows:

Ambient Temperature: 25℃± 0.5℃

Ambient Humidity: 65 ± 20%

• 4.2 The Requirement of Measurements and Instrumentations

(1) The measurements and instrumentations should be approved by qualified institute.

(2) The accuracy of the size instrument is not more than 0.01mm.

(3) The accuracy of multimeter is not less than 0.5% while measure the voltage, the internal resistance mustn't less than 10KΩ.

(4) The principal of the internal resistance is 1KHz LCR, the accuracy is 0.2%.

(5) The internal resistance is changeable; it varies according to the temperature and the charging mode. And it is relevant to the PTC and the length and the Capacity of the drawing line.

(6) The current accuracy of the battery test system is more than ±0.1%, is obarically accuracy is ±0.5%, timer accuracy is less than ±0.1%.

(7) The accuracy of the temperature meter is less than ±0.5.℃

• 4.3 Visual Inspection

Any visual inspection defects will affect the electronic characteristics, such as leakage, flaw, are not inexistence.

• 4.4 Charge/Discharge Methods and Test Conditions

NO.	Item	Testing Condition and Method
1	Charging Current	Quick CC: 1.0C Standard CC: 0.2C
2	Standard Charging	Constant Voltage Charging at 4.2V to cut-off current≤0.01C Constant Current Charging at 0.2C to 4.2V.
3	Quick Charging	Constant Voltage Charging at 4.2V to cut-off current≤0.01C Constant Current Charging at 1.0C to 4.2V
4	Standard Discharging Quick Discharging	Constant discharge at 0.2C to cut-off voltage of 2.75V. Constant discharge at 2.0C to cut-off voltage of 2.75V.
5	Charging Time	Standard charging time: 6 hours Quick charging time: 1.5 hours
6	Temperature &Humidity	Standard charging: -40℃~ 45℃ 45~85% RH Quick charging: -40℃ ~ 45℃ 45~85%RH Standard discharging: -40℃~ 60℃ 45~85% RH
7	Open Voltage	3.85~3.95V (Before shipping)

Notes: The maximum charging voltage should not be more than 4.2V, and the PCM voltage designed on PCB board should not more then 4.5V.

• 4.5 Mechanical Characteristics

NO.	Item	Testing Condition and Method	Standard
1	Vibration Testing	After standard charging, fixed the cell to vibration table and subjected to vibration cycling that the frequency is to be varied at the rate of 1Hz per minutes between 10Hz and 55Hz, the excursion of the vibration is 0.38mm. The cell shall be vibrated for 30 minutes fro three axis of XYZ axes.	No leakage. Left Capacity≥90%, after 3 hours.
2	Fall Down Testing	Drop the cell from 1meter height onto the concrete ground twice.	No explore, no fire and no leakage

• 4.6 Safety Testing

NO.	Item	Testing Condition and Method	Standard
1	Over-charge	Charge is conducted for 8 hours while the invariable voltage is 4.5V.	No deformation and leakage
2	Short-circuit	The charged battery is short-circuited for 1 hour at 100 mΩ.	No explode or fire
3	Heat Shock	Put the battery into the heat box, the temperature is rising to 120±2℃ at the rate of (5±2℃)/min and maintain for 10 minutes. Then cool down to room temperature at the rate of 5±2/min℃.	No explode or fire
4	Humidity and Heat	Put the charged battery into box for 48 hours, the temperature is 40±2℃ and the relative humidity is 90%～95% .	No smoke or explode

• 4.7 Temperature Testing

NO.	Item	Testing Condition and Method	Standard
1	High Temperature	Put the charged battery into the high temperature box for 2 hours at 55±2℃. And discharge the battery at 5C current until the voltage is 2.75V.	Discharge 90 percent of the original capacity.
2	Low Temperature	Put the charged battery into the low temperature box for 16 hours to 24 hours at -10±2. And then discharge the battery at 0.1C until the voltage is 2.75V	Discharge more than45percent of the original capacity.

• **4.8Electricity Maintenance**

NO.	Item	Testing Condition and Method	Standard
1	Electricity Maintenance	Reset the charge battery for 28 days at the ambient temperature of 25±0.5℃. And then discharge the battery until the voltage is ended.	Discharge more than 85 percent of the original capacity.

5.Storage and Others

• **5.1 Long Period Storage**

Should the batteries have been stored for 3 months and stay unused, and then it is advisable to transfer them to a dry and cool place. Voltage at storage should be between 3.6V and 3.9V and the storage conditions followed as item 4.1.

• **5.2** Any matters that this specification does not cover should be conferred between the customer and BONREX.

6. Mechanical Drawings:

6.1 Assembly Diagram（not in scale） -

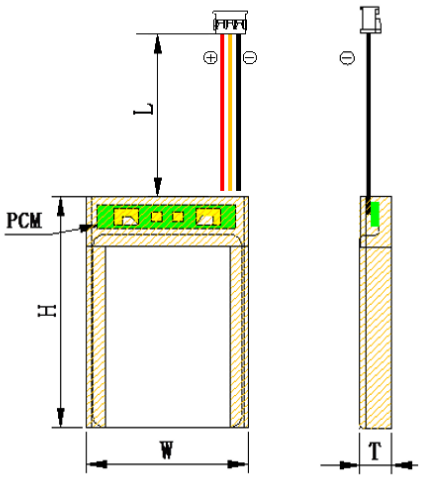

Item	Description	Dimension (mm)
T	Thickness	4.1 MAX)
W	Width	34.5(MAX)
H	Height	53.5~55
L1	The lead wire length	50±5
The model of lead wire :		UL1007 26
The model of connector :		JST PH3.0
Polarity of connector		Nomal

6.2 Single Cell Drawing（Not in scale）

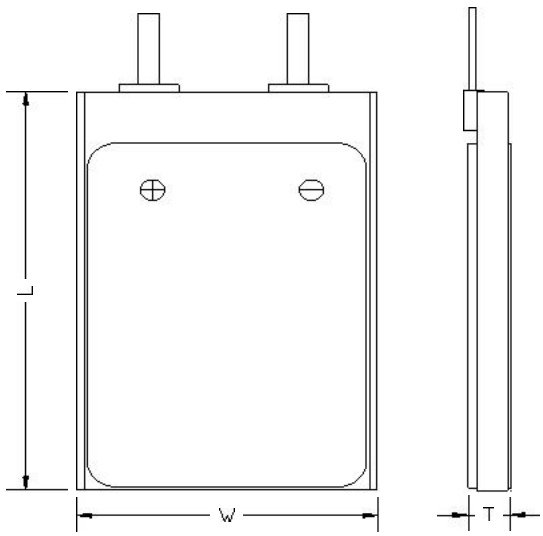

Item	Description	Dimension (mm)
T	Thickness	4.1 (MAX)
W	Width	34.5(MAX)
L	Length	52.5(MAX)

Handling Precaution and Guide line for Lithium-Ion Polymer Rechargeable Batteries

This document of 'handling precautions and guideline for rechargeable batteries' shall be applied to the battery cells manufactured by BONREX. It is advisable to contact BONREX in advance if and when the customer needs other applications of operating conditions than those described in this document. Additional experimentation may be required to verify performance and safety under such condition. BONREX will take no responsibility for any accident when the cell is used under other condition. BONREX will inform, in a written form, the customers of improvement(s) regarding proper use and handling of the cell, if it is deemed necessary.

1. Charging

1. 1Charging Current:

Charging current should be less than maximum charge current specified in the Specification Approval Sheet.

1.2 Charging Voltage:

Charging voltage should be less than the maximum nominal voltage 4.2V, and the charging voltage upper limited is 4.30V（single pack）.

1.3 Charging Temperature:

The cell should be charged within the range specified in this Specification Approval Sheet.

1.4 Notes:

Since charging with constant current or constant voltage, reverse charging is prohibited. In case of the cell is connected improperly, the cell cannot be charged. Simultaneously, the reverse charging may cause damaging to the cell which may lead to degradation of cell performance and damage the cell safety, and could cause heat generation or leakage.

2. Discharging Current:

The cell shall be discharged at less than the maximum discharge current specified in the Specification Approval Sheet. High discharging current may reduce the discharging capacity significantly or cause over-heat.

3. Discharging Temperature

Discharging Temperature should be within the range specified in this Specification Approval Sheet.

4.Over-Discharge

Over-discharging will cause cell low-performance and function loss. The cell would be in a over-discharged state by its self-discharge characteristic. In order to prevent over-discharging, the cell shall be charged periodically to maintain between 3.6V and 3.9V.

5. Protective Circuit Module (PCM)

5.1 The cell / battery pack shall be with a PCM that can protect cell / battery pack properly. PCM shall have functions of

- Overcharge prevention
- Over-discharge prevention
- Over current prevention to maintain safety and prevent significant deterioration of cell performance. The over current can occur by external short circuit.

5.2 Overcharge Protection

Overcharging prevention function shall stop charging if any cell of the battery pack reaches 4.30V.

5.3 Over-discharge Protection

Over-discharging protection function shall monitor the voltage of every cell in the pack, and work to avoid further drop in the cell voltage of 5V or less.

6. Storage

Cells should be stored in proper temperature specified in datasheet.

7. Notice!

7.1 Handling of Cells:

- Avoid any short-circuit; it will cause the pole hot and lost electronic functions.
- Soft packing is very damaged by sharp edge parts such as needles and knives. Avoid cells touch with sharp edge part, when handling and storage.
- Beside the poles is the sealed edge. Don't bend or fold dealing edge, for it is a sensitive part.
- Don't open the folding edge on both sides of the cells.
- Don't bend the tabs, for the tabs are not so stubborn.
- Avoid mechanical shock to the cells.
- Don't put the cells into the heater, washing machine or high-voltage container.
- Don't use the charger without any safety guarantee, and recommend you use specified charger.
- You should immediately stop charging, as cell is overheating, delivery any smell, changed color, distortion etc.
- Before Children use batteries, adults should explain the usage first.
- Before use batteries, please read the handling guideline carefully and fully understand.
- Away from the static-electronic field, while using, charging and storing cells.
- Don't put the cells together with metal conductors such as chains, barrette, bolt into the pocket or stored them together.
- Don't use metal conductor to shortcut the positive and negative poles.
- Don't mis-assemble the positive pole with the negative one.

7.2 Notice for Designing Battery Pack

7.2.1 Package Design

① Battery pack should have sufficient strength and battery should be protected from mechanical shock.

② No sharp edge components should be inside the pack containing the battery.

7.2.2 PCM Design

① The overcharge threshold voltage should not be exceed 4.325V (single pack)

② The over-discharge threshold voltage should not be lower than 2.50V (single pack)

③ The PCM should have short protection built inside.

7.3 Notices for Assembling Battery Pack

7.3.1 Tab Connection

① Ultrasonic welding or spot welding is recommended to connect battery with PCM or other parts.

② If apply manual solder method to connect tab with PCM, below notice is very important to ensure battery performance.

a. The solder iron should be temperature controlled and ESD safe.

b. Soldering temperature should not exceed 350℃.

c. Soldering time should not be longer than 3 seconds

d. Keep battery tab cold down before next time soldering.

e. Directly heat cell body is strictly prohibited. Battery should be damaged by heat above approx. 60℃

7.3.2 Cell Fixing

① The battery should be fixed to the battery pack by its large surface area.

② No sharp edge at the assembling position.

③ No cell movement in the battery pack should be allowed.

8.Others

8.1 The disassembling may generate internal shout circuit in the cell, which may cause gassing, firing, or other problem.

8.2 Prohibition Of Disposing Cells of Fire

Never incinerate or dispose the cells of fire, for these may cause burning of the cells.

8.3 The cells should never be soaked with liquids such as water, drinks or oil.

8.4 Prohibit using the cells mixed with different manufactories. Prohibit using new cells mixed with old ones.

▲Special Notice: Keep the cells in half-charged state, which is keeping them fully charged or completely discharged. Storing the cells in cool and dry place

Appendix

1. Electrical Characteristics

Item	Symbol	Content	Criterion
Over Charge Protection	V_{DET1}	Over charge detection voltage	4.3±0.05V
	tCU	Over charge detection delay time	0.1s to 0.2s
	V_{REL1}	Over charge release voltage	4.075±0.08V
Over Discharge Protection	V_{DET2}	Over discharge detection voltage	2.9±0.1V
	tDL	Over discharge detection delay time	20ms-120ms
	V_{REL2}	Over discharge release voltage	
Over Current Protection	V_{DET3}	Over current detection voltage	0.15±0.015V
	I_{DP}	Over current detection current	3A
	tIOV1	Over current detection delay time	8ms to 20ms
		Release condition	Cut load
Short Protection		Detection Condition	Exterior short circuit
		Release condition	Cut short circuit
	tIOV2	Shot circuit detection delay time	200-320uS
Interior Resistance	R_{DS}	Main loop electrify resistance	VC=4.2V,R_{DS}≤60mΩ
Current Consumption	I_{DD}	Current consume in normal operation	4μA Type 7.0μA Max

2. BOM of PCB

No.	Location	Part name	Specification	Package	Qty	Supplier/Remark
1	U1	Protection IC	G3J	Sot-23=8	1	Seiko
2	Q1	MOSFET	8205A	TSSOP-8	2	Depuw
3	R1	Resistor	SMD100R±5% 0603	0603	1	SKYWELL
4	R2	Resistor	SMD1K±5% 0603	0603	1	SKYWELL
5	R3	NTC	10K 1% B=3450	0603	1	SHUN LUO
6	C1	Capacitor	SMD 0.1uF 16V 0603	0603	1	SKYWELL
7	PCB	PCB	23*4*0.6mm (L*W*T)		1	ASSUN/FR4
8	B+ B-	Nickel Block	3*7*0.3mm		2	ASSUN/FR4

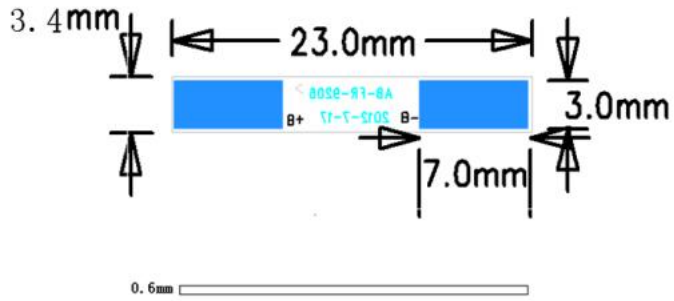

3. Application Circuit

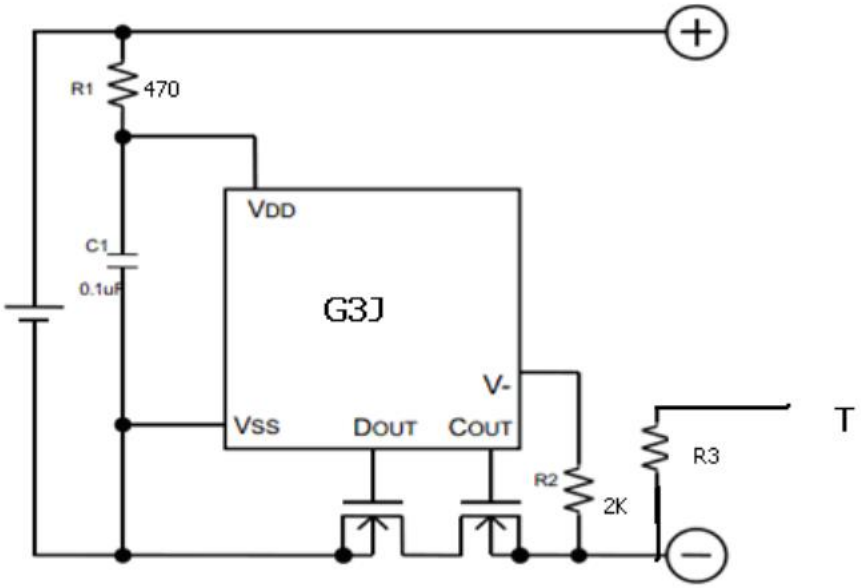

4. PCB Top Layers

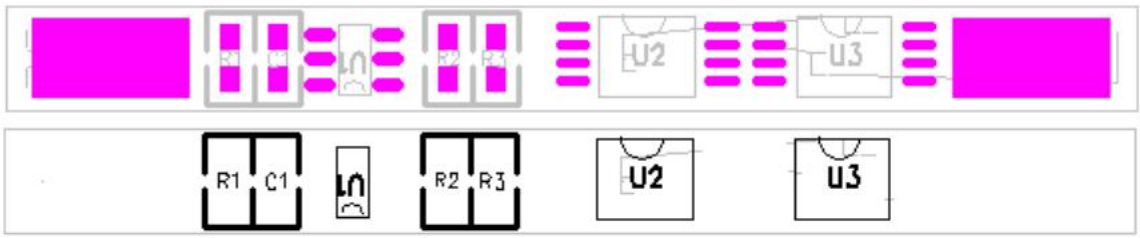

5. PCB Bottom Layer

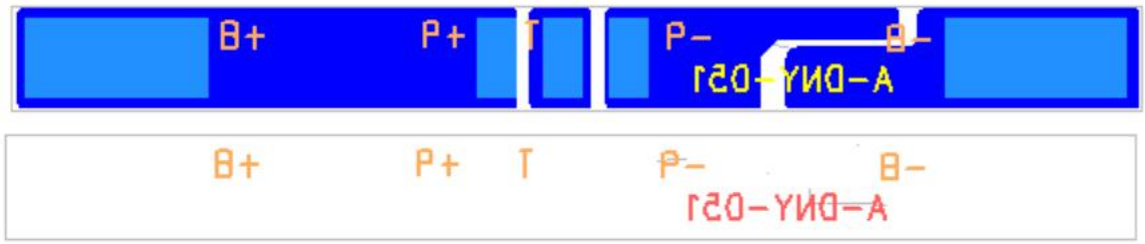

6. Absolute Maximum Ratings:

Parameter	Rating	Unit

Operating Temperature Range	-30~+70	℃
Operating Humidity Range	Less than 85% RH	%RH
Storage Temperature Range	-45~+85	℃
Storage Humidity Range	Less than 85% RH	%RH
Voltage Between Terminals Of P+ and P-	10.0	V
Voltage Between Terminals Of B+ and B-	10.0	V