Tengxiang Technology.Inc

东莞市腾祥电子有限公司

Product Number:AN1575-16B04FAK-B
Product Name: Antenna

Specification For Approval

Date: 2024.9.2

Version: 1.0

客 户 名 称
Customer：

客 户 料 号
Customer P/N：

腾 祥 料 号
T X P/N： **AN1575-16B04FAK-B**

规 格 描 述
Description： **1575MHz 蘑菇头天线 RG174 黑色线 L=300mm+FAKPA 长直母头 H 型**

Tengxiang Checked By: 腾 祥 审 核		Customer Approved By: 客 户 审 核	
DRAWN 制 作	路婷	TESTED BY 检 测	
CHECKED BY 审 核	胡超	CHECKED BY 审 核	
Q.C.DEPT. 品 管	祁志鹏	Q.C.DEPT. 品 管	
APPROVED BY 核 准	韦佳	APPROVEDBY 核 准	

东莞市腾祥电子有限公司 工程部

NO.53 Shatou ShaChong Road, ChangAn Town, Guangdong province, China
中国广东省东莞市长安镇沙头区沙涌路 53 号
TEL:86-769-81873082 FAX:86-769-82663788
http://www.tenxiang.cn

Product Number:AN1575-16B04FAK-B
Product Name: Antenna

Index:

1. Specification (规格)

2. Characteristics and Reliability Test (产品特性和可靠性测试标准)

3. Antenna - S Parameter Test Data (样品测试数据)

4. Antenna - Radiation Pattern Test Data (辐射模式测试数据)

5. Mechanical and Packing Drawing (图纸包装规范)

Revision History（变更履历）

Revision	Date	Change Notification	Description
1.0	2024.9.2	初版	

Tengxiang Technology.Inc

东莞市腾祥电子有限公司

Product Number:AN1575-16B04FAK-B
Product Name: Antenna

1. Specification

Sample Photo	
A. Electrical Characteristics	
Frequency 频率	**1570-1602MHz**
S.W.R. 驻波比	**<=2.0**
Antenna Gain 增益	**28.08dBi**
Polarization 极化方式	**Linear**
Impedance 阻抗	**50 Ohm**
B. Material & Mechanical Characteristics	
Material of Plastic 塑胶材质	**ABS**
Cable Type 线材规格	**RG174**
Connector Type 连接器规格	**FAKPA 长直母头 H 型**
C. Environmental	
Storage Temperature 存储温度	**- 30 ˚C ~ + 65 ˚C**
Operation Temperature 工作温度	**- 30 ˚C ~ + 65 ˚C**
Antenna Color Storage life 天线颜色存储寿命	**< 2** year

Product Number:AN1575-16B04FAK-B
Product Name: Antenna

2. Characteristics and Reliability Test

Test Items 测试项目		Test Condition and Procedure 测试方法	Requirements 要求	Result 结果
1	V.S.W.R. 电压驻波比	Set DUT on Network Analyzer; make individual calibration to test 设置网络分析仪参数进行测试	Directive DUT specification 符合待测物规范	PASS
2	Antenna Gain 天线增益	Set DUT on Antenna Chamber; make individual calibration to test 设置天线暗室参数进行测试	Directive DUT specification 符合待测物规范	PASS
3	Pull Test 拉力	Holding with individual specification; force applied to axis of terminal .单独定义产品端子拉力	1. Directive DUT specification 2. Frequency Tol.≤5% 符合待测物规范;频率偏移≤5%	PASS
4	Torque Test 扭力	Holding with individual specification; applied clockwise and counterclockwise to the axis of terminal 单独定义产品端子之顺时针及逆时针扭力	1. Directive DUT specification 2. Frequency Tol.≤ 5% 符合待测物规范;频率偏移≤5%	PASS
5	Dimension 尺寸	Inspection of dimension, color, material, package, surface process.检查尺寸,颜色,材料,包装,表面处理	Directive DUT specification 符合待测物规范	PASS
6	Salt Spray 盐雾	GB / T 2423.17-2008 Temp: 35°C; RH: ≥ 95%; NaCl solution: ≥ 5%;Time: 24H 温度 35°C；湿度≥95%;盐水浓度≥5%；测试 24H	1. No Visual Damage 2. Frequency Tol.≤5% 无明显外观不良;频率偏移≤5%	PASS
7	Temperature and Humidity Chamber 恒温恒湿	GB / T 2423.3-2006 Temp: 65°C / 12 H; -30°C / 12H RH: ≥ 90%; Time: 24H 温度 65°C 测试 12H 转-30°C 测试 12H；湿度≥ 90%；时间 24H	After 2 Hours Recovery 1. No Visual Damage 2. Frequency Tol.≤5% 恢复 2H 后，无明显外观不良;频率偏移≤5%	PASS
8	Aging test 老化	GB /T 2423.2 - 2008 Temp:65°C; Time: 24 hours 温度 65° C，测试 24H	After 2 Hours Recovery 1. No Visual Damage 2. Frequency Tol.≤5% 无明显外观不良;频率偏移≤5%	PASS
9	RoHS	With Reference to IEC 62321:2008 with flow chart 参考 IEC 62321 测试流程	Directive RoHS 2011/65/EU 符合 RoHS 2015/863/EU 标准	PASS

Product Number:AN1575-16B04FAK-B
Product Name: Antenna

3. Antenna - S Parameter Test Data

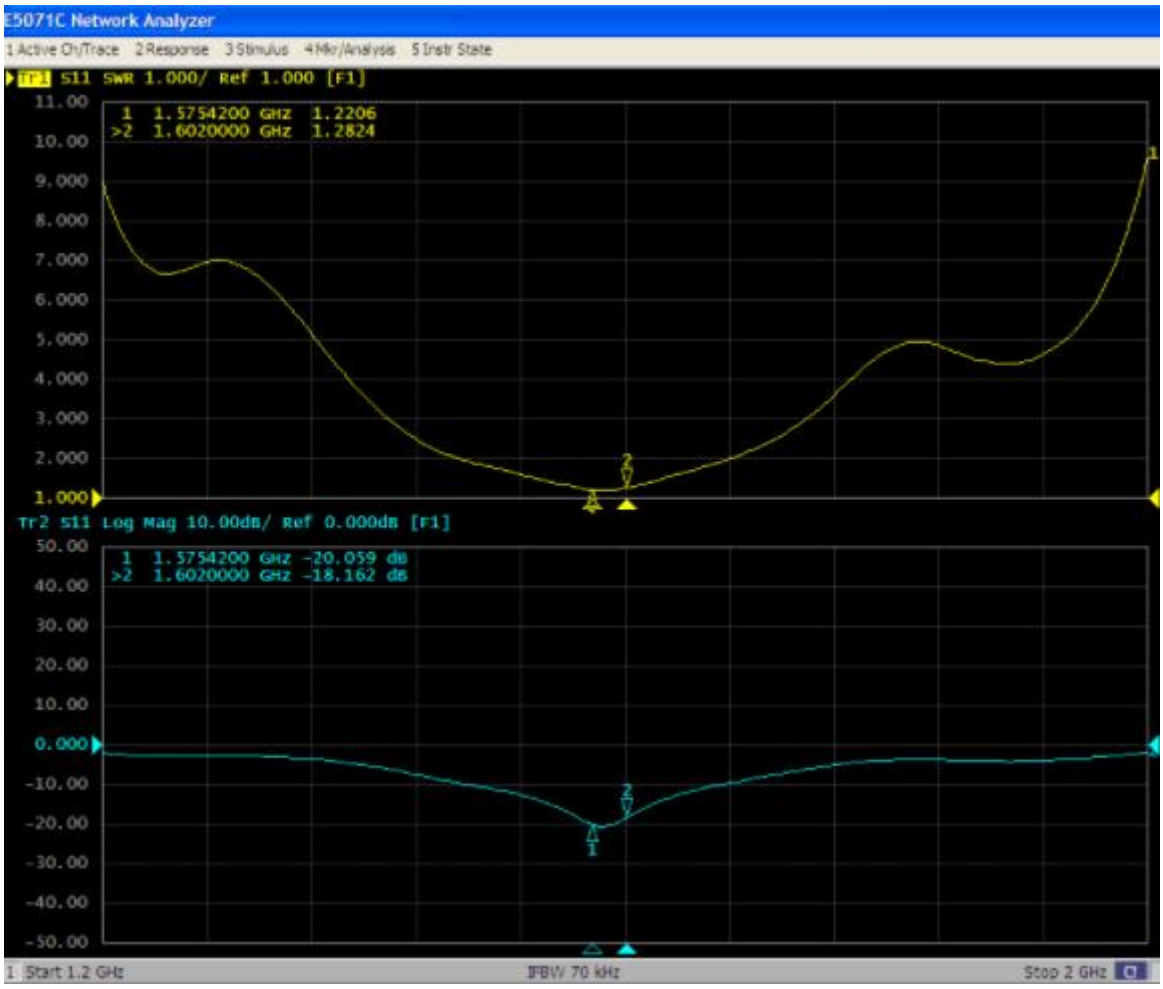

4. Antenna - Radiation Pattern Test Data

Frequency ID	1	2	3	4	5	6	7	8
Frequency (MHz)	1570.0	1575.0	1580.0	1585.0	1590.0	1595.0	1600.0	1602.0
Gain (dBi)	20.69	25.91	28.08	24.52	20.32	21.64	20.69	20.17

Product Number:AN1575-16B04FAK-B
Product Name: Antenna

XZ **YZ** **XY**

1575MHz

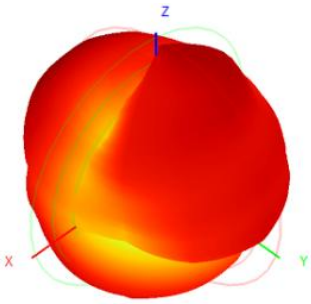

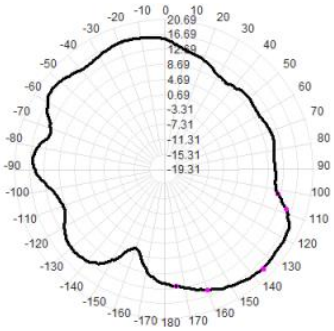

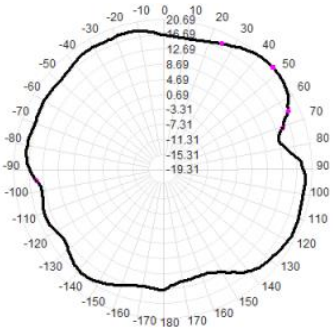

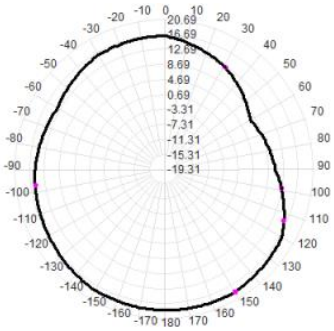

1602MHz

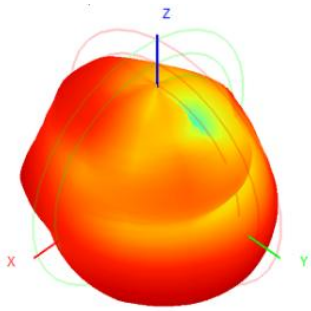

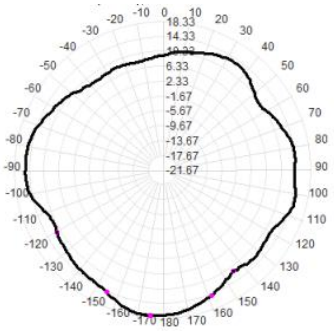

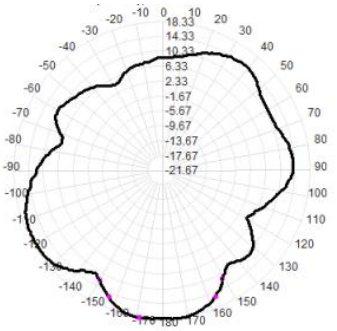

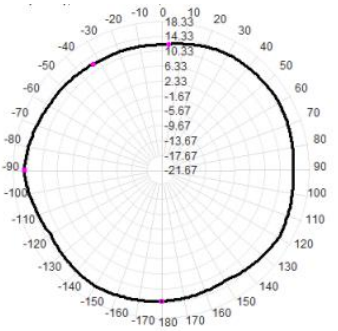

5. Mechanical Drawing See attached files

HF	☐
RoHS2.0	■
REACH	☐
CONFIDENTIAL	

SIGN	DATE	DESCRIPTION	APPROVER
B			
C			
D			

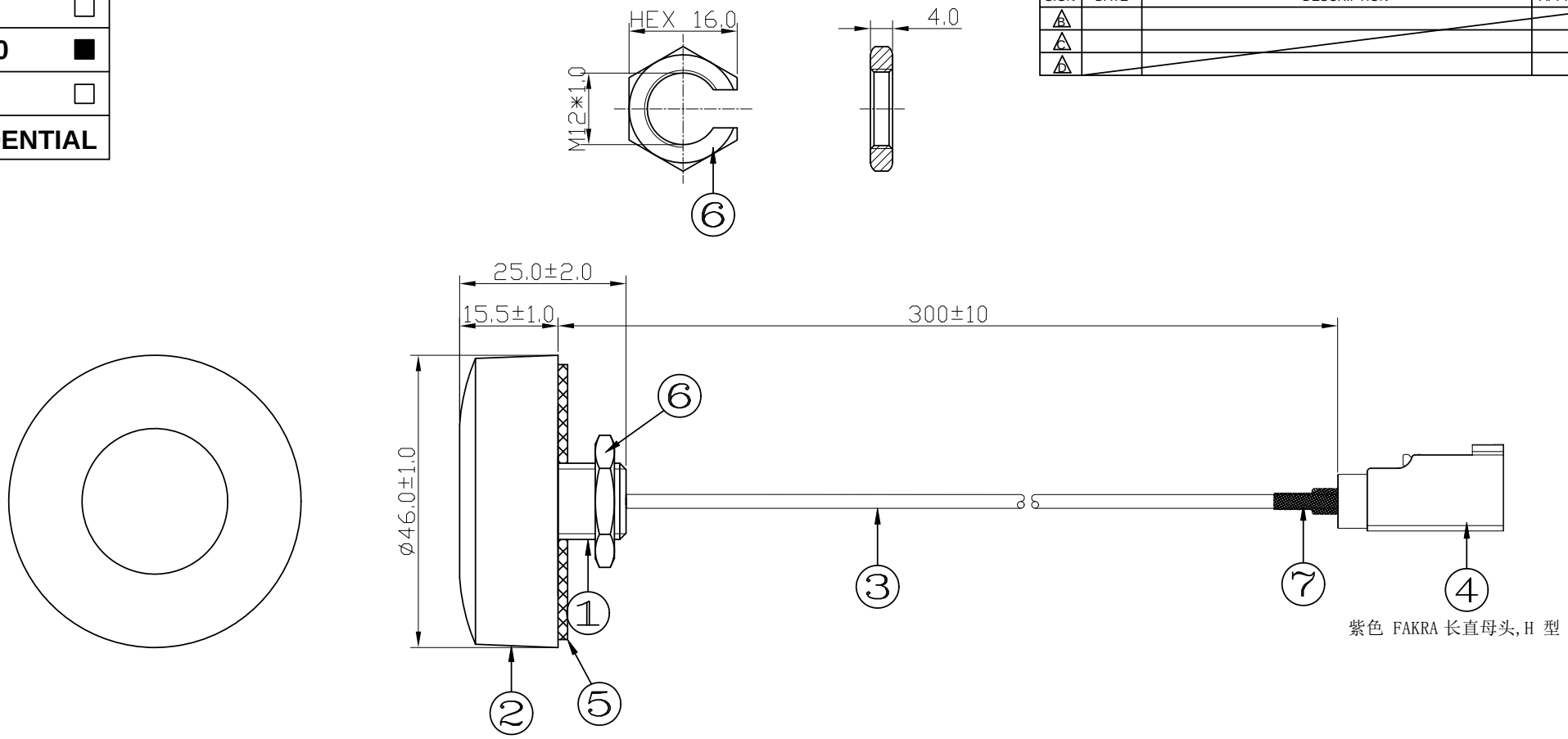

Note:

1. Mark * is important dimension;"Cpk "Identify for process control(CpK≧1.33).
2. Tolerance:Unmarked tolerance refer to the standard tolerance please.

No.	Part Number	Name	Material	Finish	Q'ty
7	HSTUBE-004N	HSTUBE	EVA	BLACK	1
6	NUT-AN16B-M12	螺母	C3604	M12*1.0	1
5	BJ-440	背胶	3M9448A	OD44.0mm*1.5mm	1
4	FY002H-KC	Female		紫色 FAKRA 长直母头,H 型	1
3	RG-174U	Coaxial Cable		Black	1
2	COV-AN16B-01B	蘑菇天线塑胶上盖	ABS	M12*1.0	1
1	ASM-COV-AN16B-02B	蘑菇天线组件 塑胶下盖+螺柱		Black	1

Tengxiang Electronics Co., Ltd.

TITLE: Antenna

PART NO.: AN1575-16B04FAK-B | CUSTOMER P/N:

APP BY	CHK BY	RF BY	DES BY		Tolerance
YCX 2024.08.31	HC 2024.08.31	WJ 2024.08.31	DWF 2024.08.31	UNITS: mm SCALE: 1/1 REVISION: A	X.X ±0.5 X.XX ±0.2 X° ±1

產品包裝規範

PACKING CRITERION

Date: 2024.08.31

Part Number : AN1575-16B04FAK-B	Revision : A
Name: Antenna	Customer : ALL

1 . Enter PE bag。

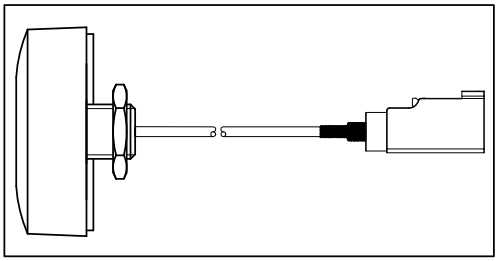

1pcs/ PE bag

2.PACKING 。

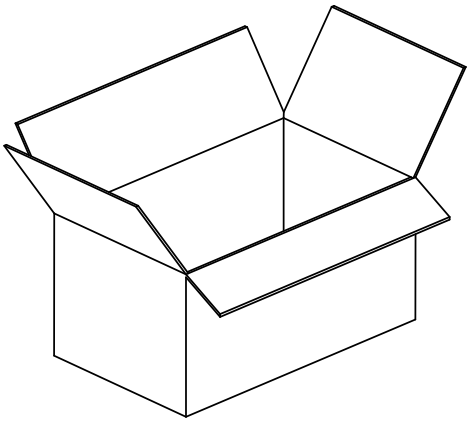

300pcs/Carton

3. SEALING。

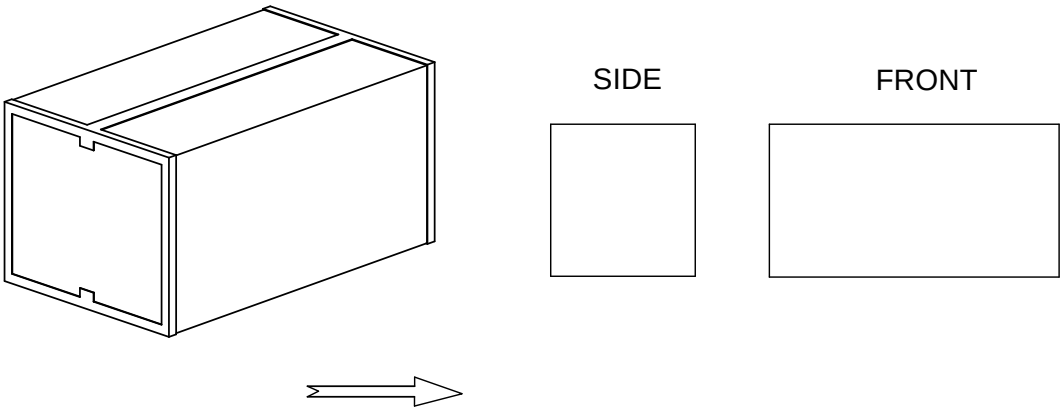

APPROVED BY： YCX CHECKED BY： HC DESIGNED BY： DWF